Modular Side Rack Adapter

Dimensions: (L) 480 x (H) 18 x (D) 480 mm

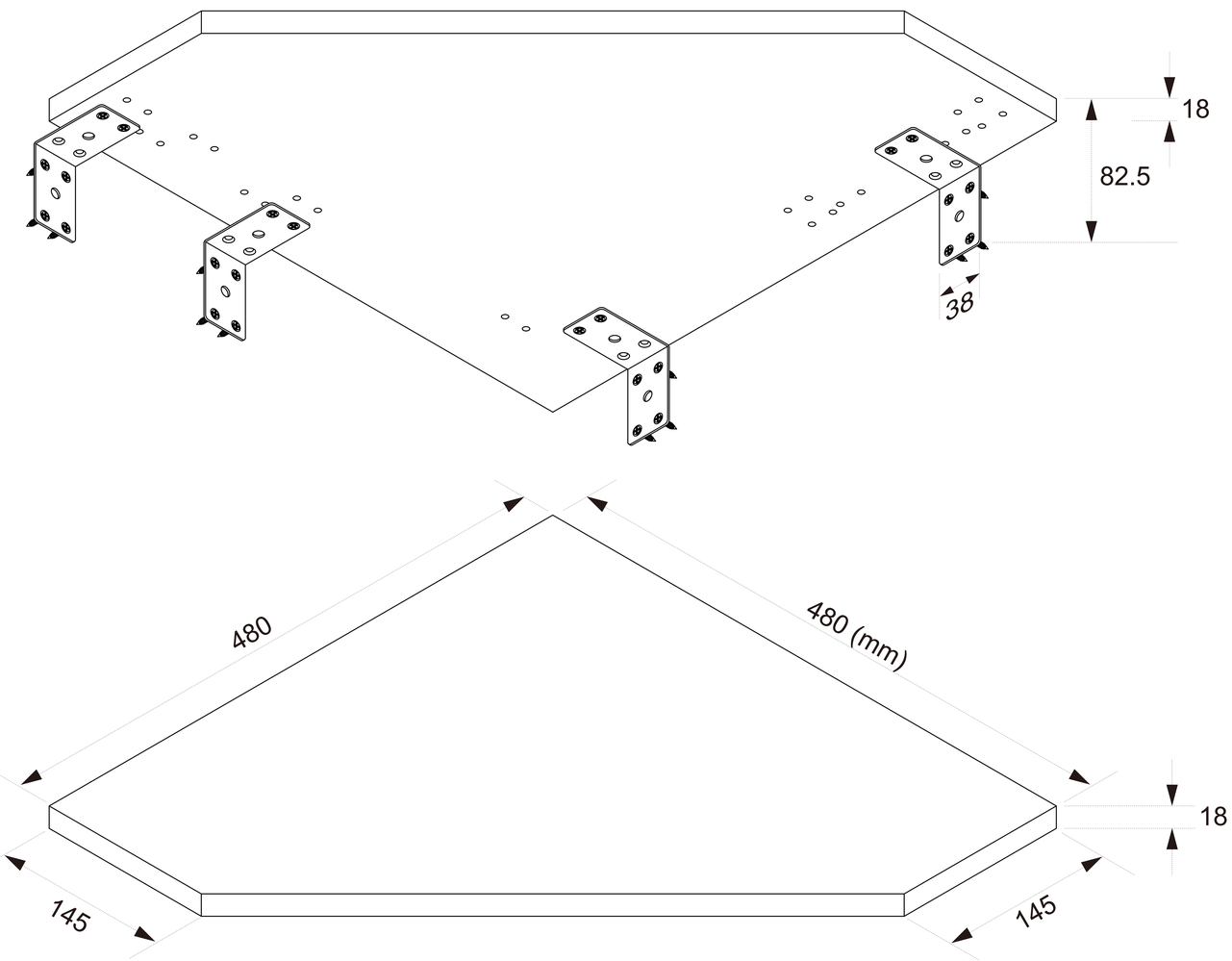

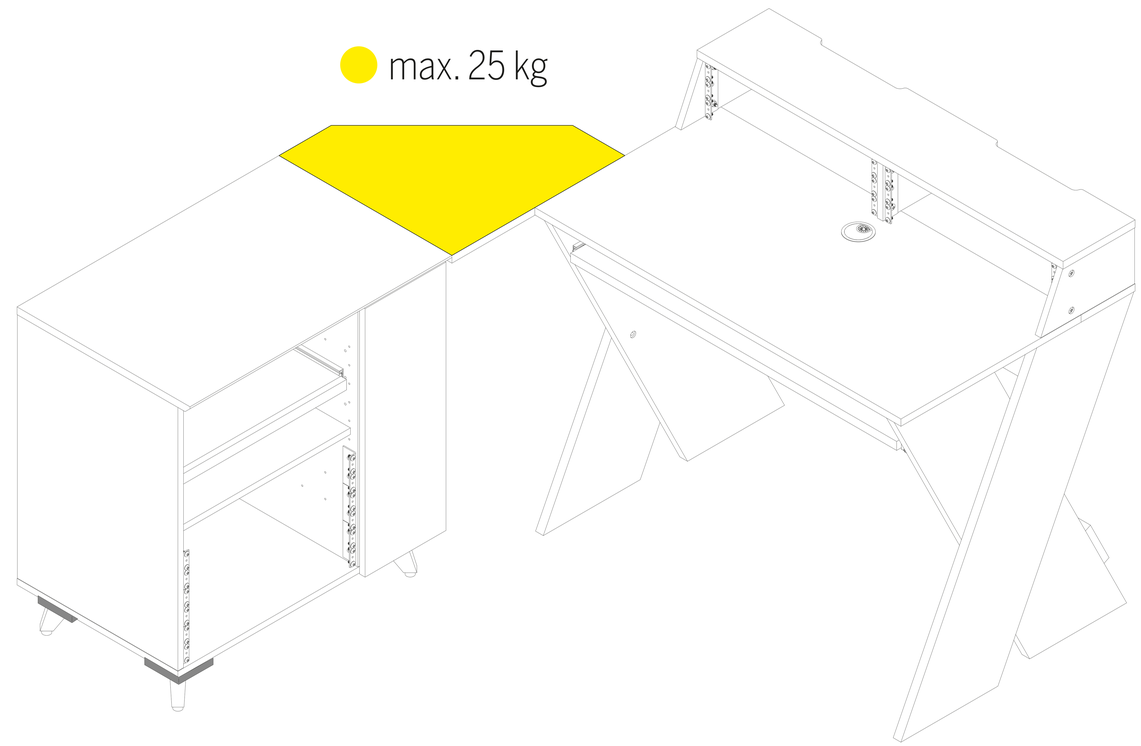

MODULAR SIDE RACK ADAPTER

GLORIOUS